CIF:modelling and analysis of heterogeneous models

Part I

Bert (D.A.) van Beek
Control Systems Technology Group – Systems Engineering
Eindhoven University of Technology

Contents

Part I

- Heterogeneous models in supervisory control system design
- CIF language and tools for
  - simulation, visualization
  - synthesis, verification
  - code generation for co-simulation and real-time control

Part II

- Case: baggage handling control system design
- Demo: CIF tooling for supervisory control synthesis

Traditional control system design multiple backends

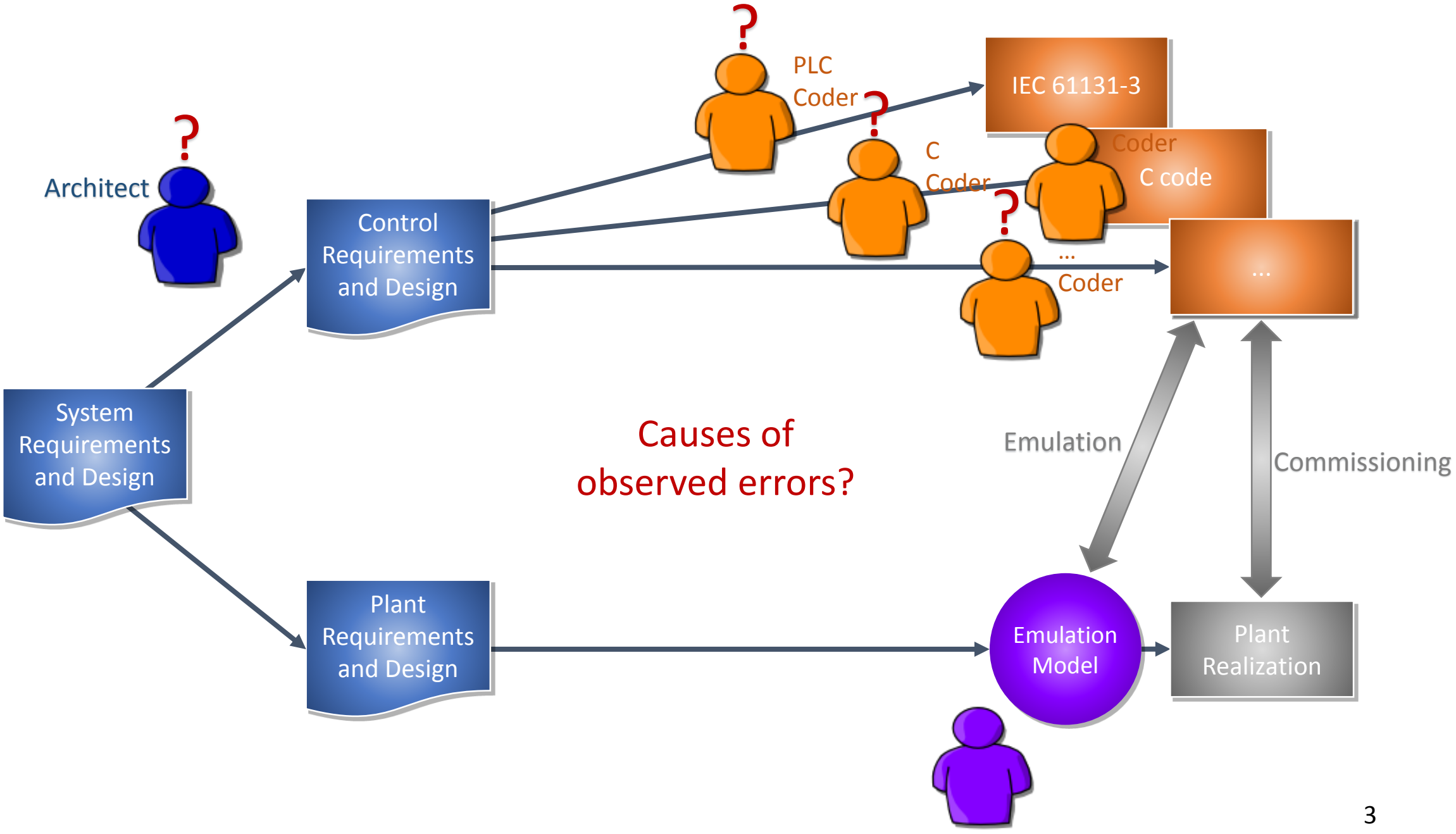

Errors

In the traditional way of working, the causes of errors are difficult to find:

- Architect and coders speak different languages, leading to misunderstandings
- Informal requirements can be:
  - ambiguous: interpreted different by architect and coders
  - inconsistent
  - erroneous and incomplete
- Coding errors and backend specific coding errors can be present
- On site adaptations not always reflected in code base

This leads to:

- long delays, many design/coding/testing iterations
- high cost
- inflexibility, difficult to make substantial changes

Controller design with code generation

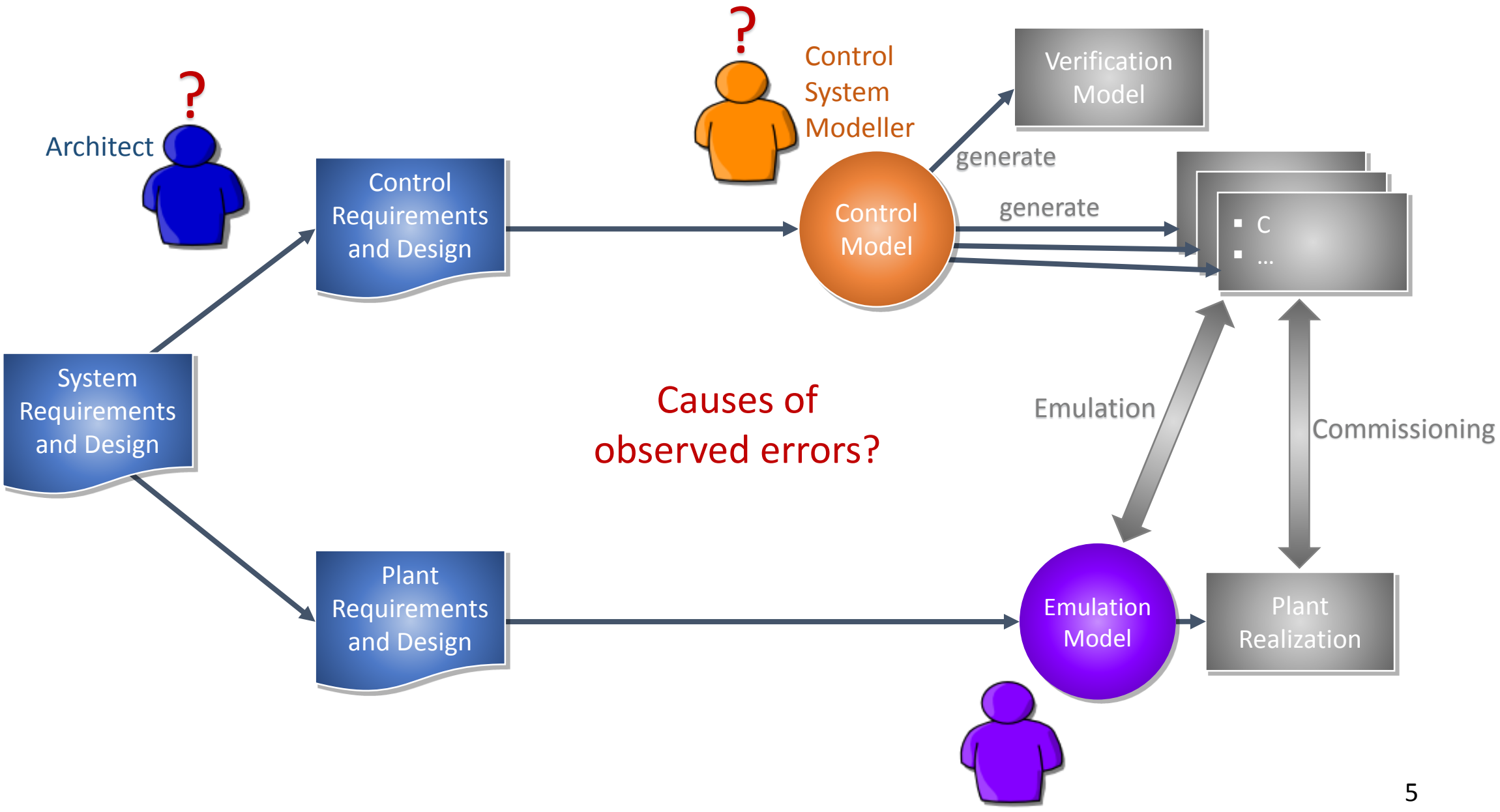

Controller design with code generation + co-simulation

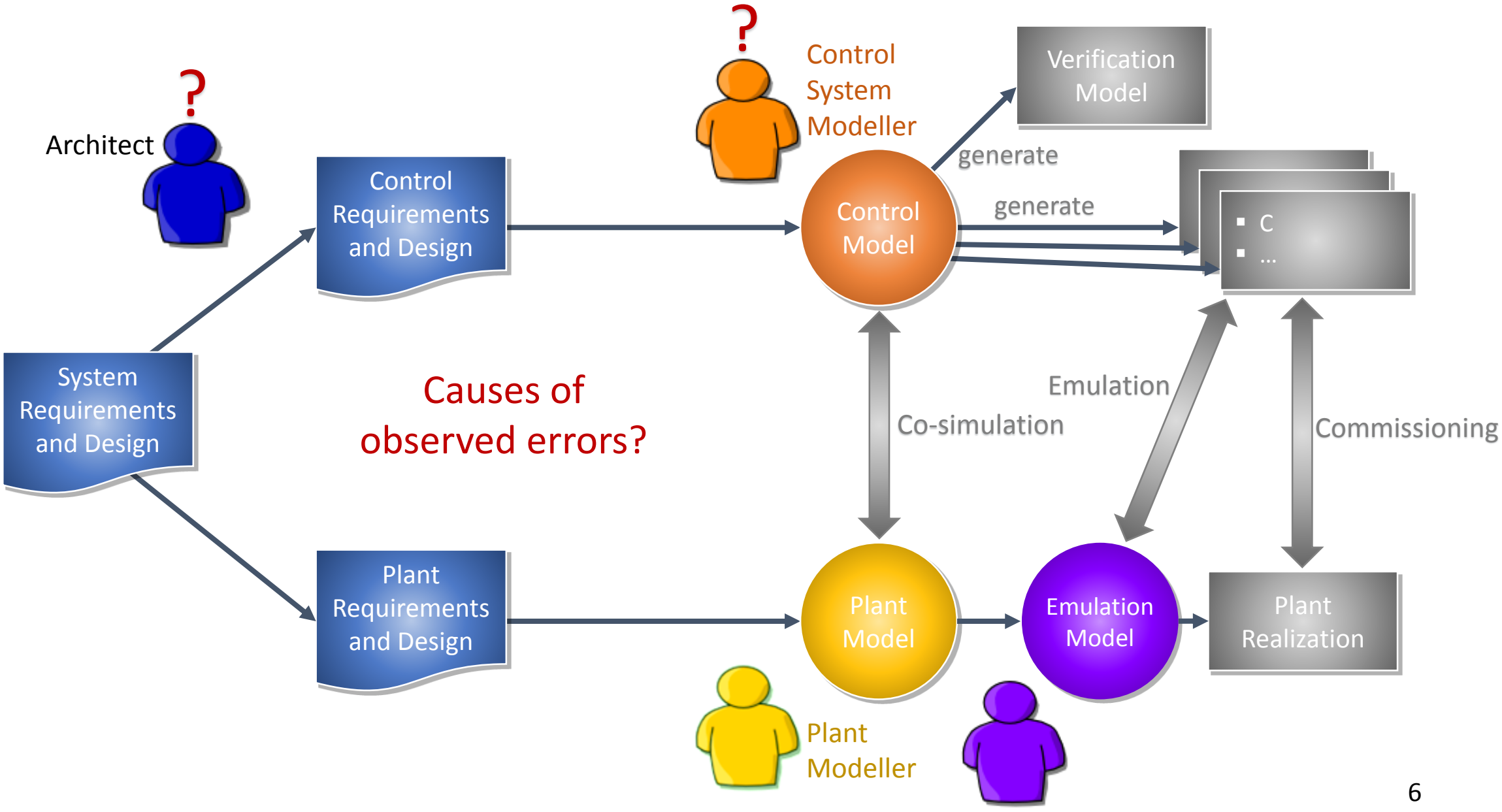

Controller design with code generation + co-simulation

Examples:

- SCADE suite by Esterel
  - Data flow modeling of controller
  - Simplorer tool for modeling of plant
  - www.esterel-technologies.com / en.wikipedia.org/wiki/Esterel_Technologies
- Matlab / Simulink
  - Stateflow for modeling of discrete-event control
  - Simulink for modeling of predominantly continuous plants

Control system design using CIF

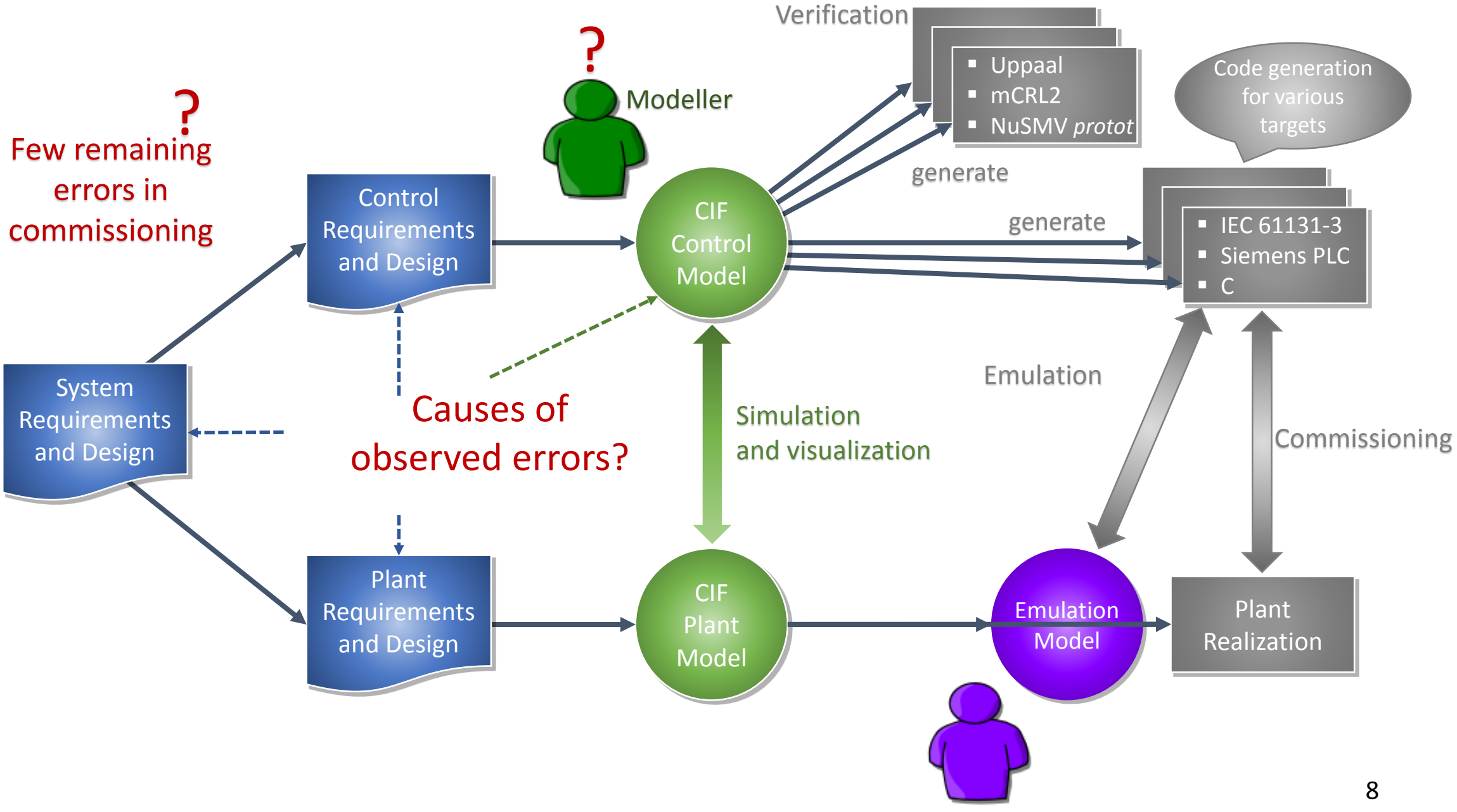

Control system synthesis

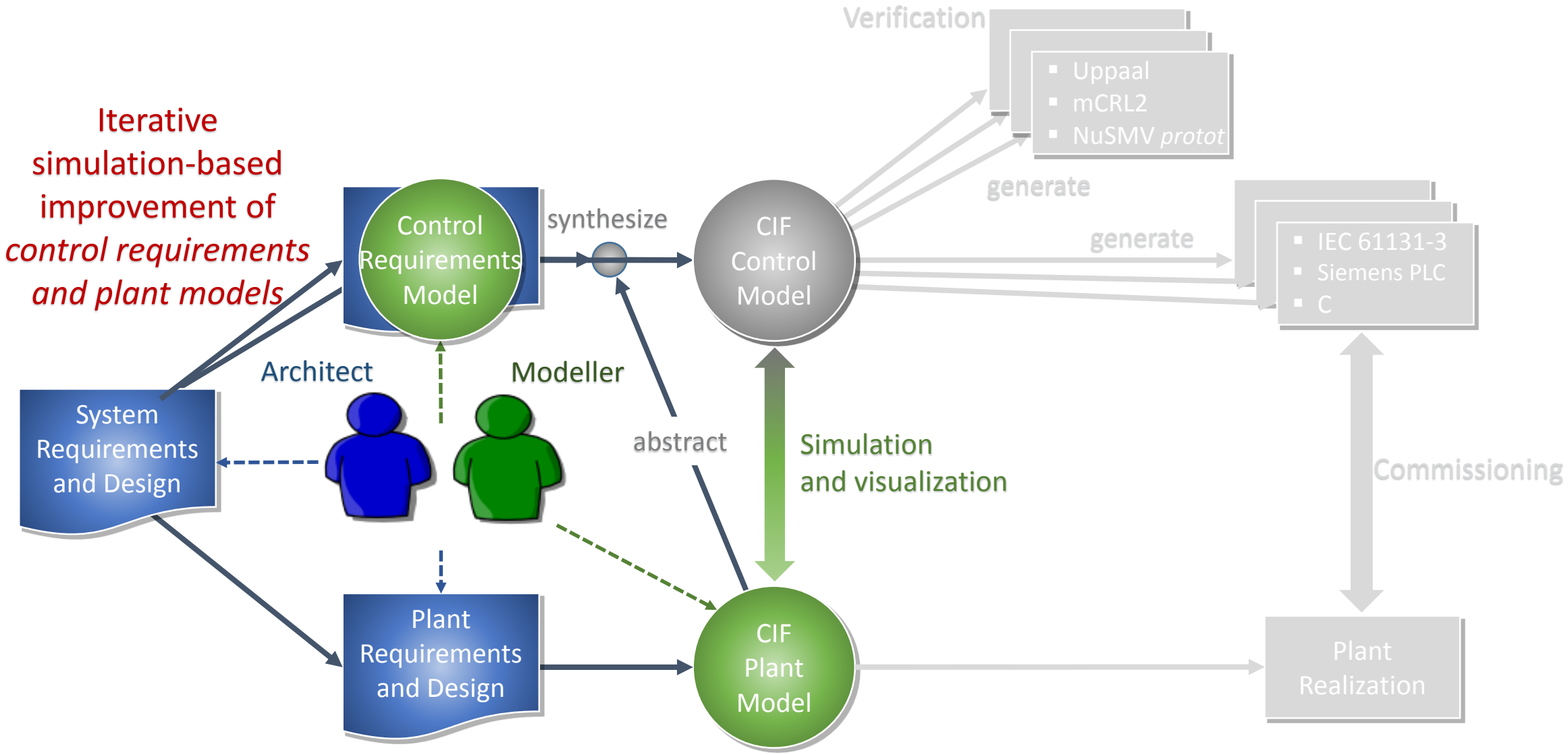

CIF overview recent status

CIF Eclipse editor

- Integrated syntax/type checker
- Intuitive error reporting and highlighting

CIF simulator

- Interactive SVG visualization
- Interactive trace exploration
- Plot and state visualizer

Supervisory controller synthesis

- Event-based synthesis
- Data-based synthesis

CIF tooling common features

- Open source with free license: MIT
- Easy install for Windows, Linux and Mac
- IDE and command line releases
- Cross-platform ToolDef 2 scripting
- Based on open standards
- Industrial quality coding standards
- Long history of international development

CIF language

- Hybrid automata
- Theoretical foundation: formal semantics
- Global read, local write variables
- Differential algebraic equations
- Invariants
- Shared events: multi-party synchronization
- Channels: point-to-point communication
- Wide range of data-types
- Stochastic distributions
- Parameterized automata and groups
- Imports

CIF website and documentation

- Extensive language tutorial
- All tooling documented in detail
- http://cif.se.wtb.tue.nl

CIF to yEd GraphML transformer

- Graphical automata diagrams
- Graphical model interaction diagrams

Co-simulation

- CIF to Matlab/Simulink S-function

Verification and synthesis

- CIF to Uppaal
- CIF to mCRL2
- CIF to NuSMV prototype
- CIF to Supremica

Real-time code generation

- CIF to IEC 61131-3: PLC Structured Text
- CIF to C
- CIF to Java

CIF screenshot

Eclipse: cross-platform open source IDE

Editor with "as you type" syntax checker

Examples browser

CIF3Examples-r7302/tank/tank.cif - Eclipse

Search Project

CIF3Examples-r7302
- bouncing_ball
- buffer_3place
- button_lamp
- button_lamp_timer
- conveyer
- fluid
- machine_buffer
- mutex
- tank
  - tank.cif
  - tank.cif.trajdata
  - tank.plt
  - tank.svg
  - tank.tooldef
- version.txt

tank.cif

equations

```
group tank:
  cont V = 10.0;
  alg real Qi = controller.n * 5.0;
  alg real Qo = sqrt(V);
  equation V' = Qi - Qo;

  svgout id "water" attr "height" value 7.5 * V;
  svgout id "V" text value fmt("V = %.2f", V);
  svgout id "Qi" text value fmt("Qi = %.1f", Qi);
  svgout id "Qo" text value fmt("Qo = %.2f", Qo);
end

automaton controller:
  alg int n;

  location closed:
    initial;
    equation n = 0;
    edge when tank.V <= 2  goto opened;

  location opened:
```

Plot Visualizer

Plotting

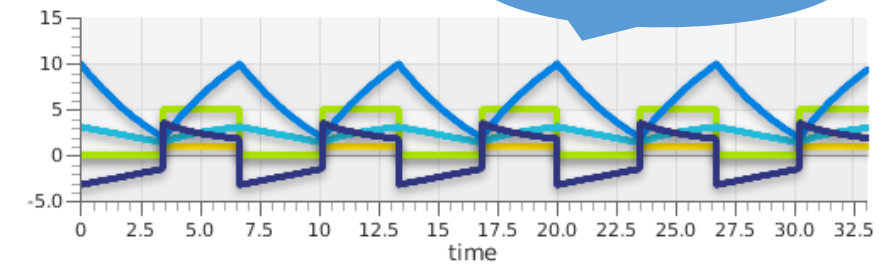

SVG Visualizer

SVG interactive visualization

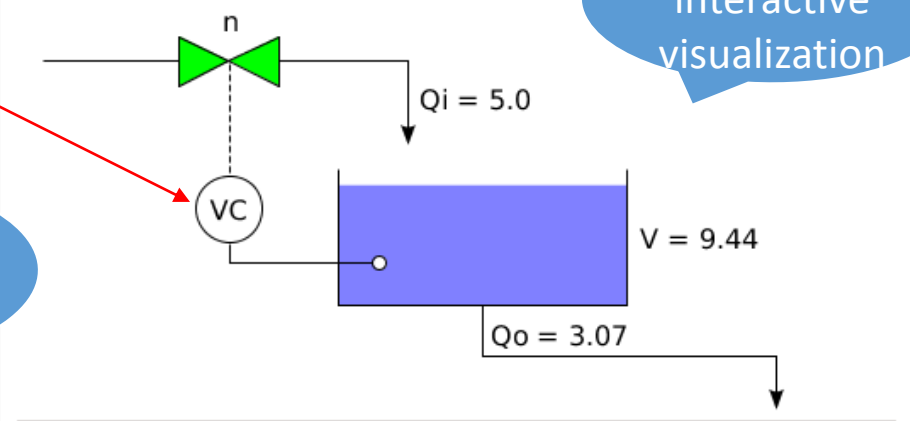

State Visualizer

State visualizer for debugging

Name	Value
time	33.12499999999998
controller	opened
controller.n	1
tank.Qi	5.0
tank.Qo	3.072459172983838

Problems | Console | Properties

ToolDef 1.2 interpreter [TERMINATED after 1m 14s 507ms] /CIF3Examples-r7302/tank/tank.tooldef (started at 201

```
Transition: delaying for 3.1883805325514345 time units at time 30.23416310817113
Simulation was terminated per the user's request.
```

Console for textual output

CIF documentation: 200+ webpages

File Edit View History Bookmarks Tools Help

CIF 3 — Compositional Interc...

cif.se.wtb.tue.nl/index.html

CIF 3 Home About Download Documentation Support Search 2014-06-11 (

CIF 3 next

CIF 3

Welcome to the website for CIF 3, the **C**ompositional **I**nterchange **F**ormat for hybrid systems. CIF automata-based modeling language for the specification of discrete event, timed, and hybrid systems. The 3 tooling supports the entire development process of controllers, including specification, supervisory cont synthesis, simulation-based validation and visualization, verification, real-time testing, code generation, etc

CIF 3 was created and is currently developed by the Systems Engineering group of the Mecha Engineering department, at the Eindhoven University of Technology (TU/e).

The CIF 3 tooling is free, and is available under the MIT open source license.

Information

About Download Support Index Search

Documentation

Language tutorial

CIF 3 textual syntax (PDF)

Event-based supervisory controller

Tools

Changelog for version r7363

File Edit View History Bookmarks Tools Help

Tools — CIF 3

cif.se.wtb.tue.nl/tools/index.html#tools

- CIF 3 text editor

Supervisory controller synthesis

- Event-based synthesis toolset
- CIF to Supremica transformer
- CIF to SCIM transformer

Simulation, validation, and visualization

- CIF 3 simulator
- CIF 3 to CIF 2 transformer

Verification

- CIF to mCRL2 transformer
- CIF to Supremica transformer

Real-time testing, code generation, and implementation

- CIF 3 PLC code generator

Miscellaneous

- CIF to CIF transformer
- CIF merger
- CIF 3 event disabler

CIF 3 » Documentation » Tools previous | next | index

Version r7363. Copyright © 2012-2014, Eindhoven University of Technology. Created using Sphinx 1.2.1.

CIF co-simulation

Cosimulation via

S-function

in Matlab / Simulink

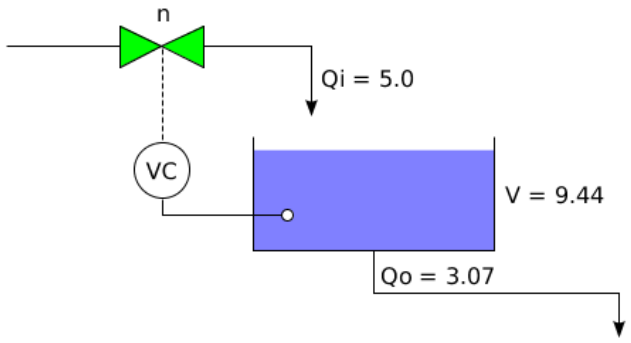

S-Function block with transformed *CIF 3* model

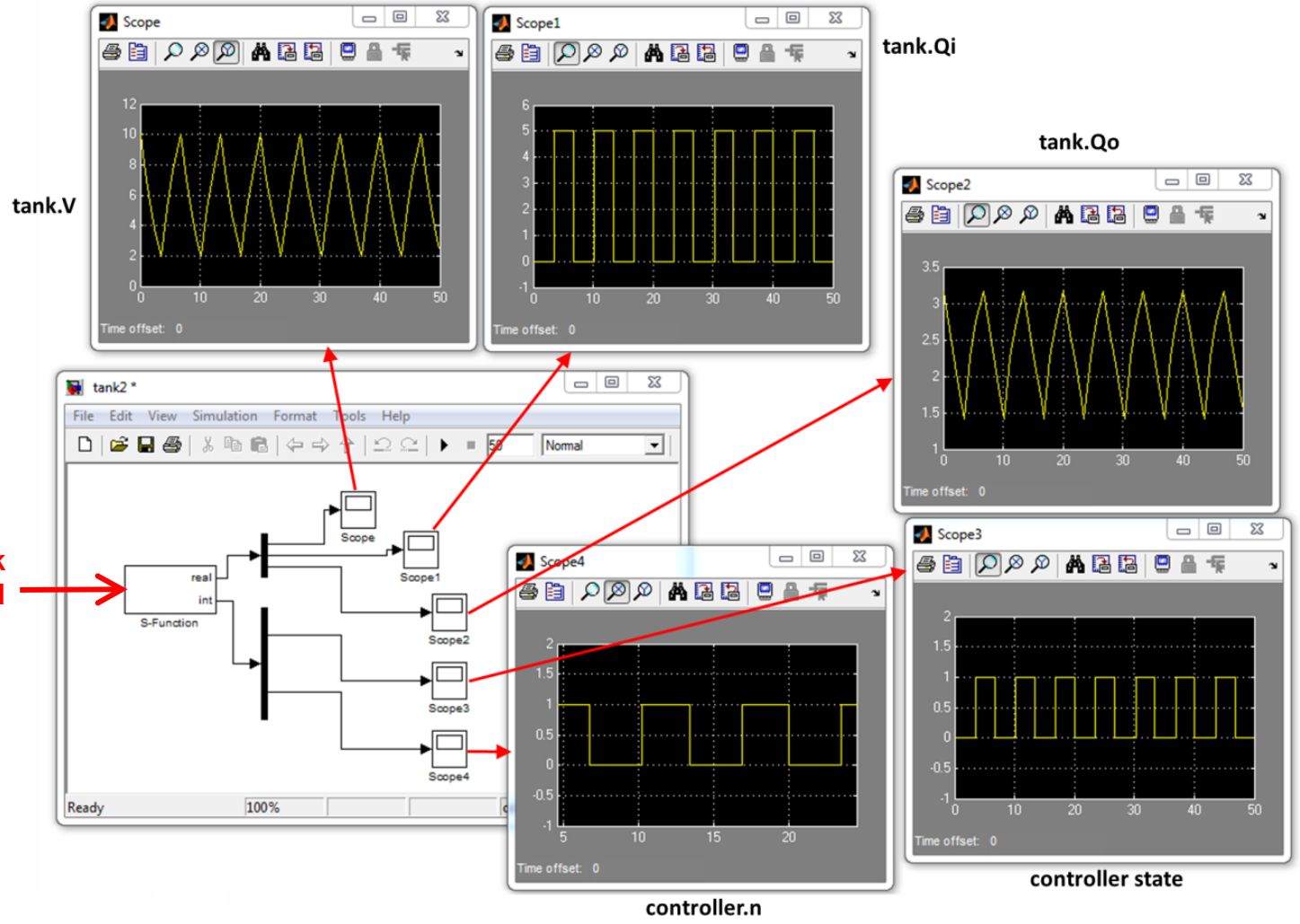

Slide:
Uni Dortmund /
Christian Sonntag